Parts:

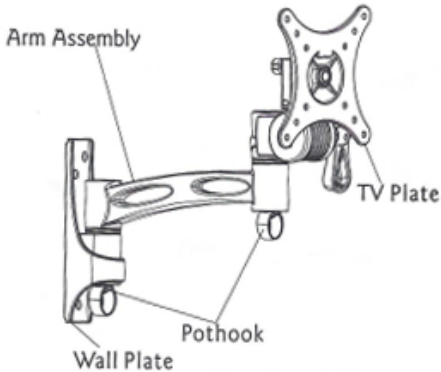

Hardware List:

ID	Qty	Description
A	4	M4x12mm bolt
B	4	M5x12mm bolt
C	3	Long Bolt
D	3	Wall Anchor
E	3	Washer
F	1	Her Wrench
G	1	Box wrench

