427-CS27

LiftFlex CPU-holder incl. track

Top view

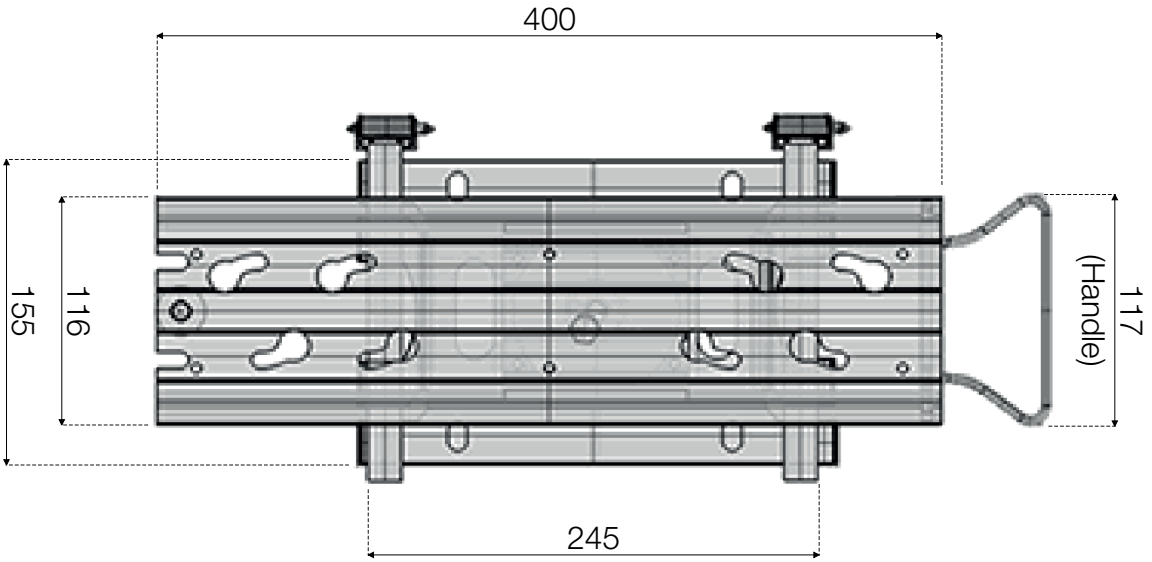

Front view

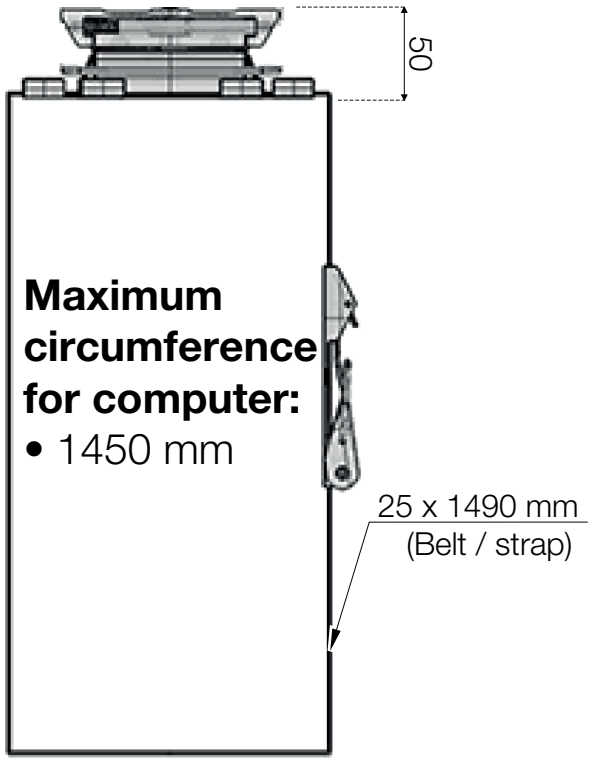

Revised
190923