Copying of this document, and giving it to others and the use or communication of the contents thereof, are forbidden without express authority. Offenders are liable to the payment of damages. All rights are reserved in the event of the grant of a patent or the registration of a utility model or design.

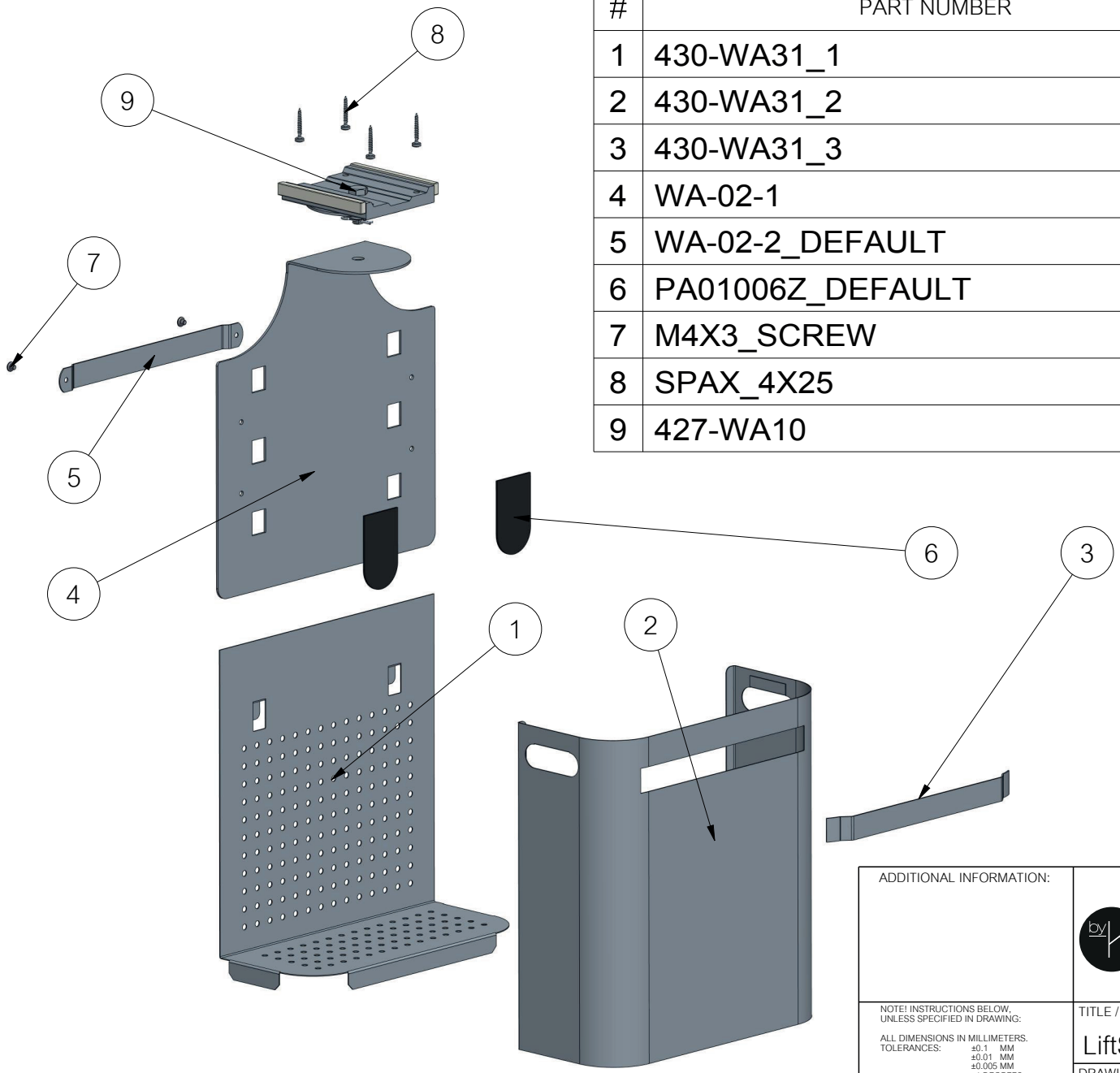

#	PART NUMBER	QTY	NOTES
1	430-WA31_1	1	
2	430-WA31_2	1	
3	430-WA31_3	1	
4	WA-02-1	1	
5	WA-02-2_DEFAULT	1	
6	PA01006Z_DEFAULT	2	
7	M4X3_SCREW	2	
8	SPAX_4X25	4	
9	427-WA10	1	

ADDITIONAL INFORMATION:

NOTE! INSTRUCTIONS BELOW, UNLESS SPECIFIED IN DRAWING:

ALL DIMENSIONS IN MILLIMETERS.
TOLERANCES: ±0.1 MM
±0.01 MM
±0.005 MM
±1 DEGREES

THREAD TOLERANCE GRADE: MEDIUM
FEMALE/INTERNAL: 6H
MALE/EXTERNAL: 6g

by KONDATOR

MATERIAL	SURFACE TREATMENT
SCALE #A4	WEIGHT (KG) 0.200
DATE (YYYY-MM-DD) 2016-04-19	REV.DATE (YYYY-MM-DD)
REVISION A	SHEET 1/1

TITLE / IDENTIFICATION

LiftSopi Recycling & Wastebin

DRAWING NUMBER

ARTICLE NUMBER / REFERENCE

430-WA30